METALEX

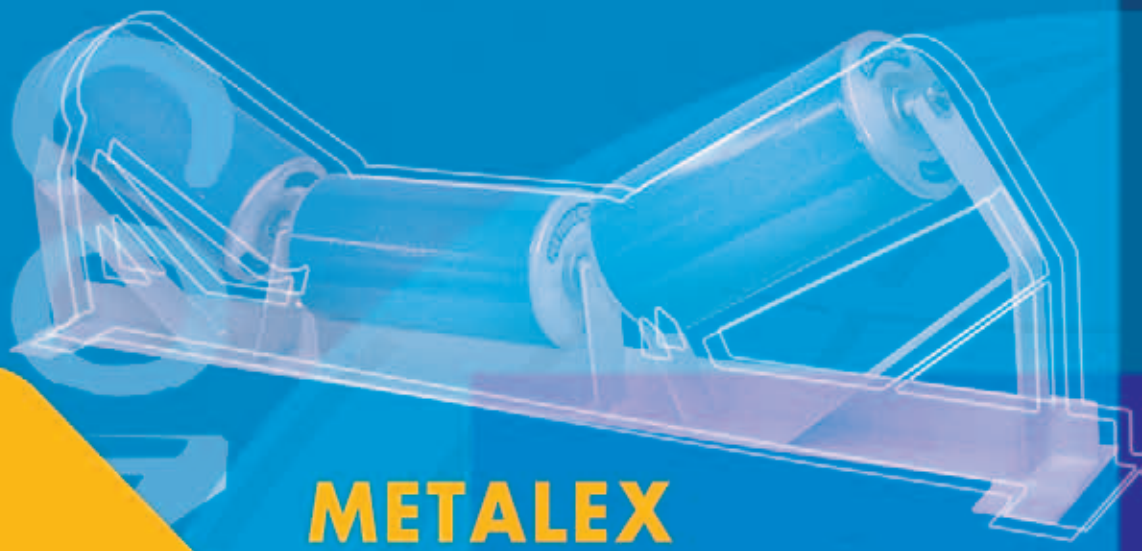

METALEX CONVEYORS

Roller Design

A) Shell

- Manufactured from seamless or lengthwise welded accurate steel tubes of ISO 4200 grade steel
- Wall thickness corresponds to the loading and operating conditions the roller is subjected to and is optimized by FEM calculations and verified by long-term testing

B) Shaft

- Drawn from ISO 1035 - 1, ISO 1035-4, EN 10278 grade round bars
- The ends of shafts are CNC machined
- The shaft is ground to a fit tolerance of ISO h6

C) Bearing housing

- Silumin-aluminium alloy
- Bearing fit tolerance to ISO M7

D) Bearing

- Single-row ball bearings are used, with dimensions in compliance with ISO 15
- 2RS - Acrylonitrile butadiene rubber (NBR) seal with sheet steel reinforcement on both sides of the bearing which prevent contaminants from entering the bearing
- C3 radial bearing clearance provides for optimum roller operation
- Bearings are filled with lithium based water repellent grease
- Bearings are filled to 70 % of the bearing's free space which provides for operation without the need for further lubrication throughout it's service life

E) Labyrinth sealing system

- The system comprises of several sealing elements which prevent contaminants from entering the bearing
- Individual elements of the system are circular in shape with interlard lips which form a labyrinth
- The shape of the lips is designed to prevent the intrusion of contaminants into the bearing chamber without increasing rotational frictional resistance
- The system has two parts - an inner labyrinth and an outer labyrinth
- The space between the lips of the labyrinth is filled with grease for catching fine dust particles.
- The grease is the same as the bearing grease
- Elements of the labyrinth sealing system are made from silumin-aluminium alloy
- The labyrinth system can be fitted with a friction ring to prevent the intrusion of water

F) Circlip

- Manufactured from hardened spring steel in compliance with DIN 471
- Prevents axial movement of the shaft

Types of Rollers

Flat rollers
used for carrying and return idlers, recommended up to belt widths of 2000mm

Training rollers
used for conveyor belt alignment when passing through the training idler

Rubber-lagged rollers
used to reduce the dynamic effects of impact in the filling area or hopper

Impact rollers
used to reduce the dynamic effects of impact in the filling area or hopper

Return disc rollers (self-cleaning)
used for cleaning belts from residual contamination

Return spiral rollers (self-cleaning)
used for cleaning heavily contaminated belts

Designation according to DIN 15207

roller type	d	bearing	ch	F	G
PSV/1	20	6204	14	13	9
PSV/2	25	6205	18	16	12
PSV/3	25	6305	18	16	12
PSV/4	30	6206	22	16	12
PSV/5	30	6306	22	16	12
PSV/7	40	6308	32	16	12

COMPANY WITH QUALITY MANAGEMENT SYSTEM CERTIFIED BY DNV =ISO 9001 : 2000=

Flat Roller

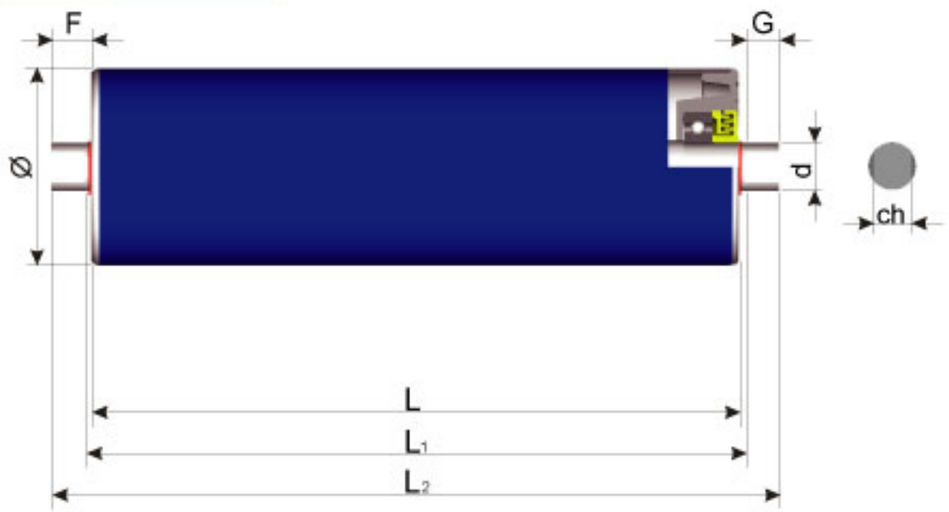

PSV 1 ø60mm F

roller type	d	bearing	ch	F	G
PSV/1	20	6204	14	13	9

Dimensions (mm)			Weight (kg)		Belt width (mm) arrangements		
L	L_1	L_2	rotating parts	total			
160	**168**	186	1.2	1.8			**400**
200	**208**	226	1.4	2.1		300	500
250	**258**	276	1.7	2.5		**400**	650
315	**323**	341	2.0	3.0		500	800
380	**388**	406	2.3	3.5	300	650	1000
465	**473**	491	2.7	4.2		800	1200
500	**508**	526	2.9	4.5	**400**		
600	**608**	626	3.4	5.3	500	1000	
700	**708**	726	3.9	6.1		1200	
750	**758**	776	4.2	6.5	650		
950	**958**	976	5.2	8.1	800		
1150	**1158**	1176	6.2	9.7	1000		
1400	**1408**	1426	7.4	11.7	1200		

PSV1 Ø89mm F

roller type	d	bearing	ch	F	G
PSV/1	20	6204	14	13	9

Dimensions (mm)			Weight (kg)		Belt width (mm) arrangements		
L	L_1	L_2	rotating parts	total			
160	**168**	186	2.0	2.6			**400**
200	**208**	226	2.4	3.1		300	500
250	**258**	276	2.8	3.7		**400**	650
315	**323**	341	3.3	4.4		500	800
380	**388**	406	3.9	5.1	300	650	1000
465	**473**	491	4.6	6.1		800	1200
500	**508**	526	4.9	6.5	**400**		
530	**538**	556	5.2	6.8			1400
600	**608**	626	5.7	7.6	500	1000	
700	**708**	726	6.6	8.8		1200	
750	**758**	776	7.0	9.4	650		
800	**808**	826	7.4	9.9		1400	
950	**958**	976	8.7	11.6	800		
1150	**1158**	1176	10.4	13.9	1000		
1400	**1408**	1426	12.5	16.8	1200		
1600	**1608**	1626	14.1	19.0	1400		

Flat Roller

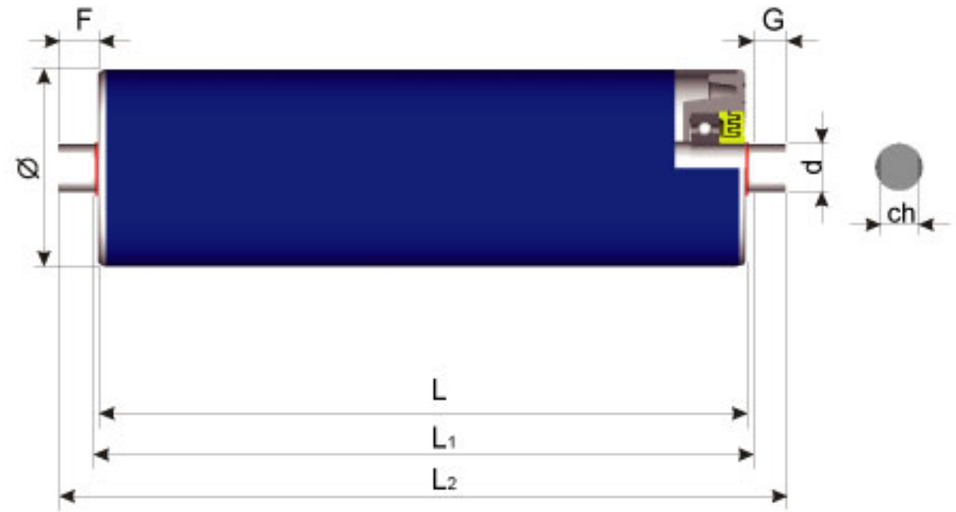

PSV/3 Ø108mm F

roller type	d	bearing	ch	F	G
PSV/3	25	6305	18	16	12

Dimensions (mm)			Weight (kg)		Belt width (mm) arrangements		
L	L_1	L_2	rotating parts	total			
250	**258**	282	3.9	5.3			650
315	**323**	347	4.5	6.3			800
380	**388**	412	5.2	7.3		650	1000
465	**473**	497	6.1	8.6		800	1200
530	**538**	562	6.8	9.6			1400
600	**608**	632	7.5	10.6		1000	1600
700	**708**	732	8.5	12.2		1200	
750	**758**	782	9.0	12.9	650		
800	**808**	832	9.5	13.7		1400	
900	**908**	932	10.6	15.2		1600	
950	**958**	982	11.1	16.0	800		
1150	**1158**	1182	13.1	19.0	1000		
1400	**1408**	1432	15.7	22.9	1200		
1600	**1608**	1632	17.8	25.9	1400		

PSV/4 Ø108mm F

roller type	d	bearing	ch	F	G
PSV/4	30	6206	22	16	12

Dimensions (mm)			Weight (kg)		Belt width (mm) arrangements		
L	L_1	L_2	rotating parts	total			
315	**323**	347	4.5	6.7			800
380	**388**	412	5.2	7.8			1000
465	**473**	497	6.1	9.2		800	1200
530	**538**	562	6.8	10.3			1400
600	**608**	632	7.5	11.5		1000	1600
700	**708**	732	8.5	13.2		1200	
800	**808**	832	9.5	14.8		1400	
900	**908**	932	10.6	16.5		1600	
950	**958**	982	11.1	17.3	800		
1150	**1158**	1182	13.1	20.7	1000		
1400	**1408**	1432	15.7	24.8	1200		
1600	**1608**	1632	17.8	28.2	1400		
1800	**1808**	1832	19.8	31.5	1600		

Flat Roller

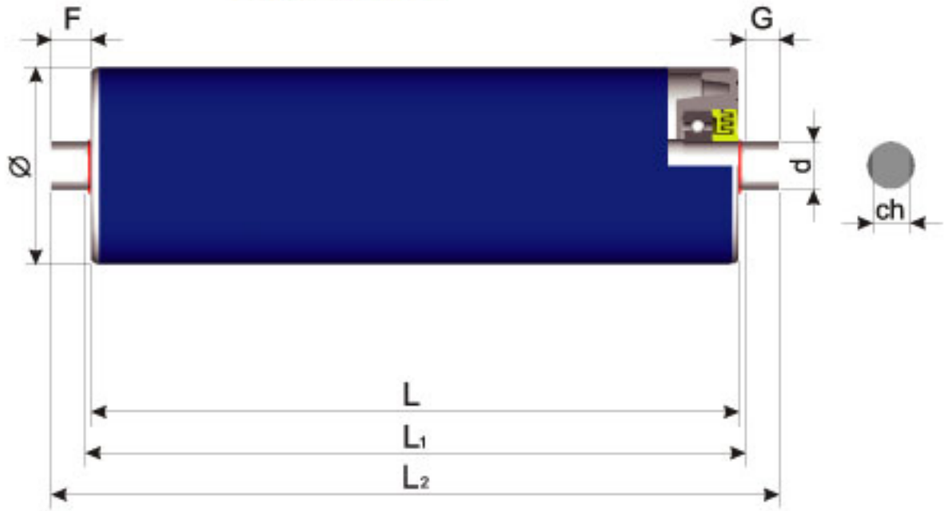

PSV/5 Ø108mm F

roller type	d	bearing	ch	F	G
PSV/5	30	6306	22	16	12

Dimensions (mm)			Weight (kg)		Belt width (mm)				
L	L1	L2	rotating parts	total					
315	**323**	347	4.6	6.8					800
380	**388**	412	5.3	7.9					1000
465	**473**	497	6.2	9.3				800	1200
530	**538**	562	6.9	10.4					1400
600	**608**	632	7.6	11.6				1000	1600
670	**678**	702	8.3	12.7					1800
700	**708**	732	8.6	13.3				1200	
750	**758**	782	9.1	14.1					2000
800	**808**	832	9.6	14.9				1400	
900	**908**	932	10.7	16.6				1600	
950	**958**	982	11.2	17.4	800				
1000	**1008**	1032	11.7	18.3				1800	
1100	**1108**	1132	12.7	19.9				2000	
1150	**1158**	1182	13.2	20.8	1000				
1400	**1408**	1432	15.8	24.9	1200				
1600	**1608**	1632	17.9	28.3	1400				
1800	**1808**	1832	19.9	31.6	1600				
2000	**2008**	2032	22.0	35.0	1800				
2200	**2208**	2232	24.1	38.3	2000				

PSV/3 Ø133mm F

roller type	d	bearing	ch	F	G
PSV/3	25	6305	18	16	12

Dimensions (mm)			Weight (kg)		Belt width (mm)				
L	L1	L2	rotating parts	total					
315	**323**	347	5.8	7.6					800
380	**388**	412	6.6	8.7					1000
465	**473**	497	7.7	10.2				800	1200
530	**538**	562	8.5	11.4					1400
600	**608**	632	9.4	12.6				1000	1600
670	**678**	702	10.3	13.9					1800
700	**708**	732	10.7	14.4				1200	
750	**758**	782	11.3	15.3					2000
800	**808**	832	12.0	16.2				1400	
900	**908**	932	13.2	17.9				1600	
950	**958**	982	13.9	18.8	800				
1000	**1008**	1032	14.5	19.7				1800	
1100	**1108**	1132	15.8	21.5				2000	
1150	**1158**	1182	16.4	22.4	1000				
1400	**1408**	1432	19.6	26.8	1200				
1600	**1608**	1632	22.1	30.3	1400				
1800	**1808**	1832	24.7	33.9	1600				
2000	**2008**	2032	27.2	37.4	1800				

Flat Roller

PSV/5 Ø133mm F

roller type	d	bearing	ch	F	G
PSV/5	30	6306	22	16	12

Dimensions (mm)			Weight (kg)		Belt width (mm)				
L	L1	L2	rotating parts	total					
315	**323**	347	6.0	8.2					800
380	**388**	412	6.8	9.5					1000
465	**473**	497	7.9	11.1				800	1200
530	**538**	562	8.7	12.3					1400
600	**608**	632	9.6	13.7				1000	1600
670	**678**	702	10.5	15.0					1800
700	**708**	732	10.9	15.6				1200	
750	**758**	782	11.5	16.5					2000
800	**808**	832	12.2	17.5				1400	
900	**908**	932	13.4	19.4				1600	
950	**958**	982	14.1	20.3	800				
1000	**1008**	1032	14.7	21.3				1800	
1100	**1108**	1132	16.0	23.2				2000	
1150	**1158**	1182	16.6	24.2	1000				
1400	**1408**	1432	19.8	28.9	1200				
1600	**1608**	1632	22.3	32.8	1400				
1800	**1808**	1832	24.9	36.6	1600				
2000	**2008**	2032	27.4	40.4	1800				
2200	**2208**	2232	29.9	44.2	2000				

PSV/7 Ø159mm F

roller type	d	bearing	ch	F	G
PSV/7	40	6308	32	16	12

Dimensions (mm)			Weight (kg)		Belt width (mm)				
L	L1	L2	rotating parts	total					
380	**388**	412	9.0	13.7					1000
465	**473**	497	10.3	15.9				800	1200
530	**538**	562	11.3	17.6					1400
600	**608**	632	12.4	19.5				1000	1600
670	**678**	702	13.5	21.3					1800
700	**708**	732	13.9	22.1				1200	
750	**758**	782	14.7	23.4					2000
800	**808**	832	15.4	24.7				1400	2200
900	**908**	932	17.0	27.4				1600	
1000	**1008**	1032	18.5	30.0				1800	
1100	**1108**	1132	20.0	32.6				2000	
1150	**1158**	1182	20.8	33.9	1000				
1250	**1258**	1282	22.3	36.6				2200	
1400	**1408**	1432	24.6	40.5	1200				
1600	**1608**	1632	27.7	45.8	1400				
1800	**1808**	1832	30.7	51.0	1600				
2000	**2008**	2032	33.8	56.3	1800				
2200	**2208**	2232	36.9	61.6	2000				
2500	**2508**	2532	41.5	69.5	2200				

Training Roller

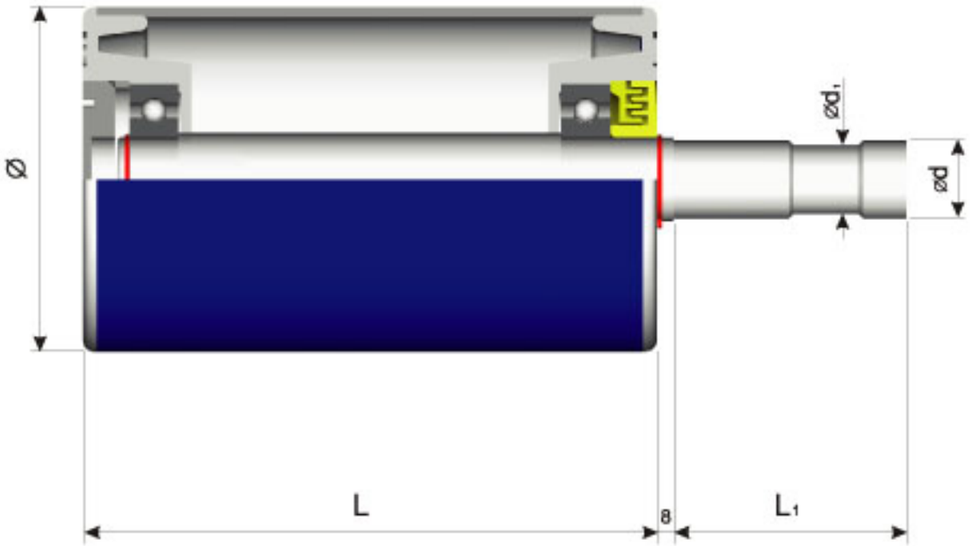

Rubber - lagged Roller

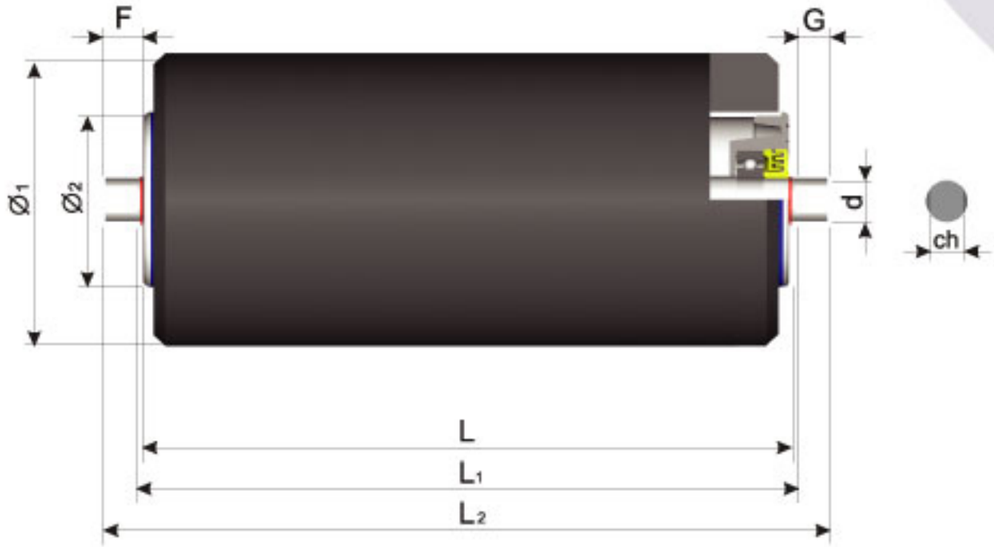

Ø60mm, Ø89mm, Ø108mm

(mm)	L	L1	d	d	Bearing	Weight (kg)	Belt width (mm)
60	130	30	17	15	6204	1.8	400-800
60	150	30	17	15	6204	2.0	400-800
89	160	40	20	18	6204	2.7	650-1200
89	200	40	20	18	6204	3.1	650-1200
108	160	45	25	23	6305	4.3	1200-2000
108	200	45	25	23	6305	5.0	1200-2000

PSV/1 Ø89/Ø60 R

roller type	d	bearing	ch	F	G
PSV/1	20	6204	14	13	9

Dimensions (mm)			Weight (kg)		Belt width (mm)		
L	L1	L2	rotating parts	total			
160	**168**	186	2.0	2.6			400
200	**208**	226	2.4	3.1		300	500
250	**258**	276	3.0	3.8		400	650
315	**323**	341	3.6	4.7		500	800
380	**388**	406	4.3	5.5	300	650	1000
465	**473**	491	5.1	6.6		800	1200
500	**508**	526	5.5	7.1	400		
530	**538**	556	5.8	7.5			1400
600	**608**	626	6.5	8.4	500	1000	
700	**708**	726	7.5	9.7		1200	
750	**758**	776	8.1	10.4	650		
800	**808**	826	8.6	11.1		1400	
950	**958**	976	10.1	13.0	800		
1150	**1158**	1176	12.1	15.7	1000		
1400	**1408**	1426	14.7	19.0	1200		
1600	**1608**	1626	16.7	21.6	1400		

PSV/1 Ø133/Ø89 R

roller type	d	bearing	ch	F	G
PSV/1	20	6204	14	13	9

Dimensions (mm)			Weight (kg)		Belt width (mm)		
L	L1	L2	rotating parts	total			
315	**323**	341	6.9	8.0			800
380	**388**	406	8.2	9.4			1000
465	**473**	491	9.9	11.4		800	1200
530	**538**	556	11.1	12.8			1400
600	**608**	626	12.5	14.4		1000	1600
670	**678**	796	13.9	16.0			1800
700	**708**	726	14.5	16.7		1200	
750	**758**	776	15.5	17.8			2000
800	**808**	826	16.5	19.0		1400	
900	**908**	926	18.4	21.2		1600	
950	**958**	976	19.4	22.4	800		
1000	**1008**	1026	20.4	23.5		1800	
1100	**1108**	1126	22.4	25.8		2000	
1150	**1158**	1176	23.4	26.9	1000		
1400	**1408**	1426	28.3	32.6	1200		
1600	**1608**	1626	32.2	37.1	1400		
1800	**1808**	1826	36.2	41.7	1600		
2000	**2008**	2026	40.1	46.2	1800		

Impact Roller

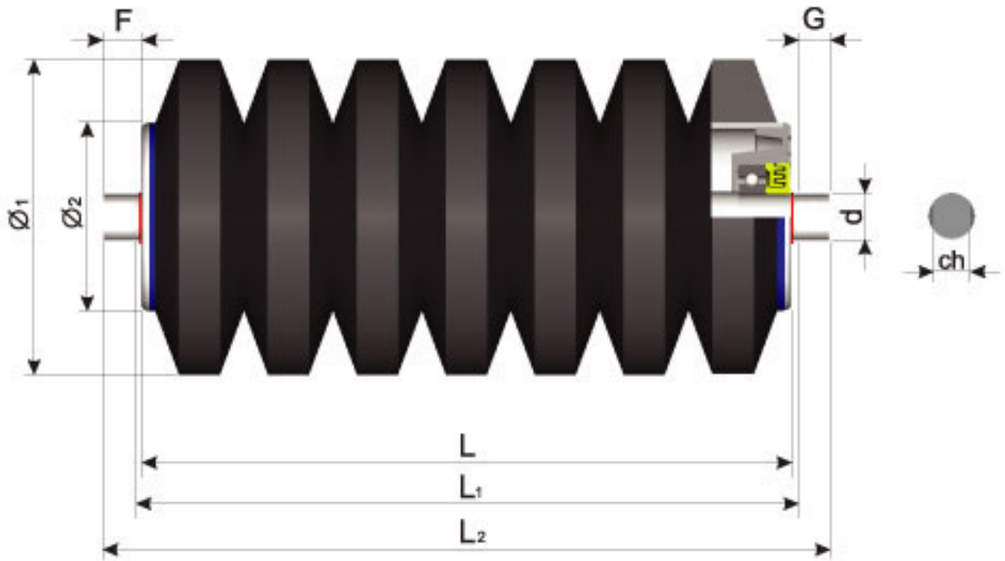

PSV/1 Ø89/Ø60 I

roller type	d	bearing	ch	F	G
PSV/1	20	6204	14	13	9

Dimensions (mm)			Weight (kg)		Belt width (mm)		
L	L1	L2	rotating parts	total			
160	**168**	186	1.8	2.4			400
200	**208**	226	2.1	2.8		300	500
250	**258**	276	2.6	3.4		400	650
315	**323**	341	3.1	4.2		500	800
380	**388**	406	3.7	4.9	300	650	1000
465	**473**	491	4.4	5.9		800	1200
500	**508**	526	4.8	6.4	400		
530	**538**	556	5.0	6.7			1400
600	**608**	626	5.6	7.5	500	1000	
700	**708**	726	6.5	8.7		1200	
750	**758**	776	6.9	9.3	650		
800	**808**	826	7.4	9.9		1400	
950	**958**	976	8.7	11.6	800		
1150	**1158**	1176	10.4	14.0	1000		
1400	**1408**	1426	12.6	16.9	1200		
1600	**1608**	1626	14.3	19.2	1400		

PSV/1 Ø108/Ø60 I

roller type	d	bearing	ch	F	G
PSV/1	20	6204	14	13	9

Dimensions (mm)			Weight (kg)		Belt width (mm)		
L	L1	L2	rotating parts	total			
160	**168**	186	2.3	2.9			400
200	**208**	226	2.7	3.4		300	500
250	**258**	276	3.3	4.2		400	650
315	**323**	341	4.1	5.1		500	800
380	**388**	406	4.8	6.1	300	650	1000
465	**473**	491	5.8	7.3		800	1200
500	**508**	526	6.3	7.9	400		
530	**538**	556	6.6	8.3			1400
600	**608**	626	7.4	9.3	500	1000	
700	**708**	726	8.6	10.8		1200	
750	**758**	776	9.2	11.5	650		
800	**808**	826	9.8	12.3		1400	
950	**958**	976	11.5	14.5	800		
1150	**1158**	1176	13.9	17.4	1000		
1400	**1408**	1426	16.8	21.1	1200		
1600	**1608**	1626	19.1	24.0	1400		

Impact Roller

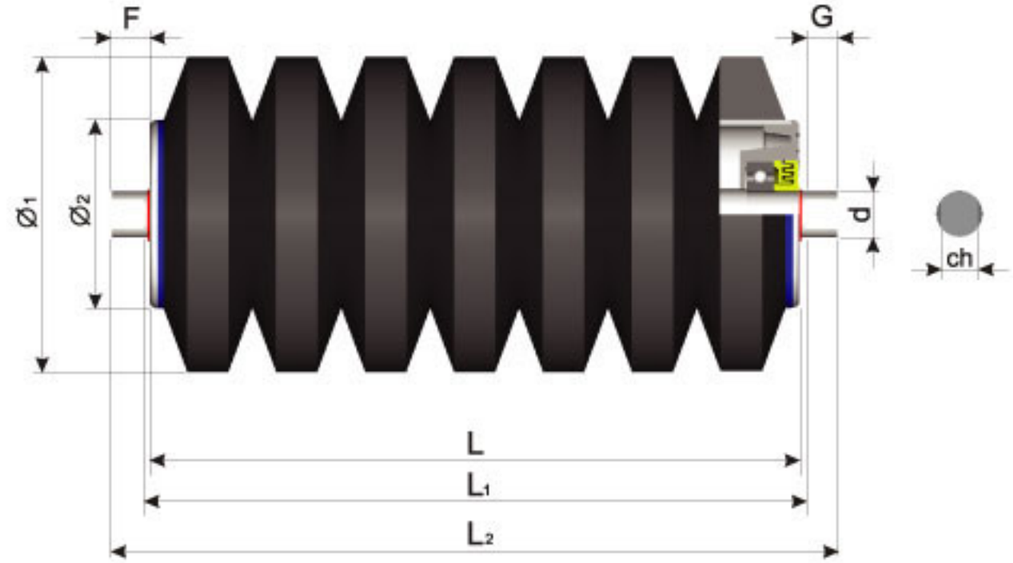

PSV/1 Ø133Ø89 I

roller type	d	bearing	ch	F	G
PSV/1	20	6204	14	13	9

Dimensions (mm)			Weight (kg)		Belt width (mm)		
L	L1	L2	rotating parts	total			
160	**168**	186	3.3	3.9			400
200	**208**	226	3.9	4.6		300	500
250	**258**	276	4.8	5.6		400	650
315	**323**	341	5.8	6.8		500	800
380	**388**	406	6.9	8.1	300	650	1000
465	**473**	491	8.2	9.7		800	1200
500	**508**	526	8.8	10.4	400		
530	**538**	556	9.3	11.0			1400
600	**608**	626	10.4	12.3	500	1000	
700	**708**	726	12.0	14.2		1200	
750	**758**	776	12.9	15.2	650		
800	**808**	826	13.7	16.2		1400	
950	**958**	976	16.1	19.0	800		
1150	**1158**	1176	19.3	22.9	1000		
1400	**1408**	1426	23.4	27.7	1200		
1600	**1608**	1626	26.6	31.5	1400		

PSV/1 Ø159/Ø89 I

roller type	d	bearing	ch	F	G
PSV/1	20	6204	14	13	9

Dimensions (mm)			Weight (kg)		Belt width (mm)		
L	L1	L2	rotating parts	total			
315	**323**	341	6.3	7.4			800
380	**388**	406	7.5	8.7			1000
465	**473**	491	9.0	10.5		800	1200
530	**538**	556	9.7	11.3			1400
600	**608**	626	10.2	11.9		1000	1600
670	**678**	796	11.4	13.3			1800
700	**708**	726	13.2	15.4		1200	
750	**758**	776	14.1	16.5			2000
800	**808**	826	15.0	17.5		1400	
900	**908**	926	16.8	19.6		1600	
950	**958**	976	17.7	20.7	800		
1000	**1008**	1026	18.6	21.7		1800	
1100	**1108**	1126	20.4	23.8		2000	
1150	**1158**	1176	21.3	24.8	1000		
1400	**1408**	1426	25.8	30.1	1200		
1600	**1608**	1626	29.3	34.2	1400		
1800	**1808**	1826	32.9	38.4	1600		
2000	**2008**	2026	36.5	42.6	1800		

Return Disc Roller

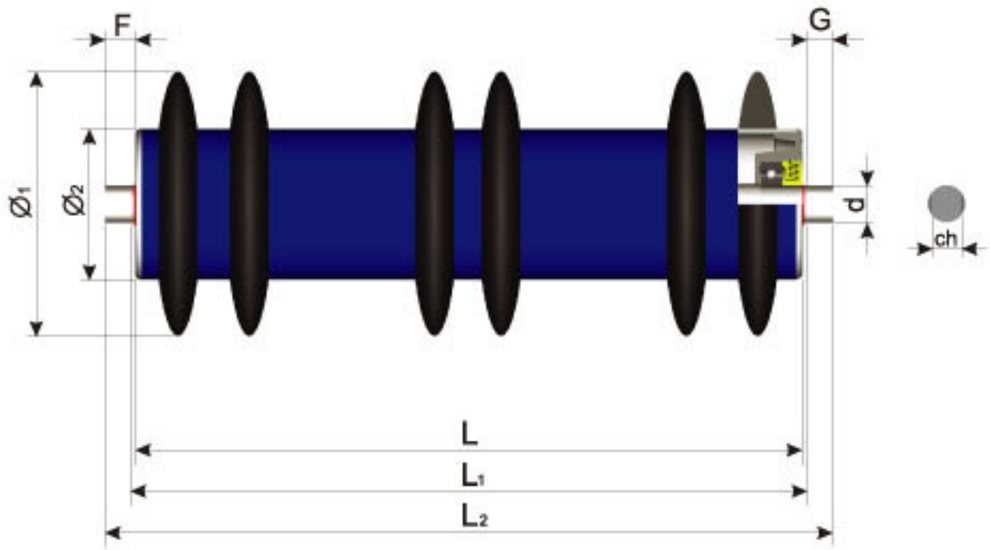

PSV/1 Ø108/Ø60mm D

roller type	d	bearing	ch	F	G
PSV/1	20	6204	14	13	9

Dimensions (mm) L	L1	L2	Weight (kg) rotating parts	total	Belt width (mm) arrangements	Number of rubber discs
380	**388**	406	3.7	5.0	300	2+1+2
500	**508**	526	4.8	6.4	400	2+1+2
600	**608**	626	5.7	7.6	500	2+2+2
750	**758**	776	7.0	9.4	650	2+3+2
950	**958**	976	8.8	11.7	800	3+4+3
1150	**1158**	1176	10.5	14.1	1000	3+6+3
1400	**1408**	1426	12.7	17.0	1200	3+7+3
1600	**1608**	1626	14.5	19.4	1400	4+8+4

PSV/1 Ø133/Ø60 D

roller type	d	bearing	ch	F	G
PSV/1	20	6204	14	13	9

Dimensions (mm) L	L1	L2	Weight (kg) rotating parts	total	Belt width (mm) arrangements	Number of rubber discs
600	**608**	626	7.4	9.3	500	2+2+2
750	**758**	776	9.1	11.5	650	2+3+2
950	**958**	976	11.4	14.4	800	3+4+3
1150	**1158**	1176	13.7	17.3	1000	3+6+3
1400	**1408**	1426	16.6	20.9	1200	3+7+3
1600	**1608**	1626	19.0	23.9	1400	4+8+4
1800	**1808**	1826	21.3	26.8	1600	4+9+4
2000	**2008**	2026	23.6	29.7	1800	4+10+4
2200	**2208**	2226	25.9	32.6	2000	4+11+4

Return Disc Roller

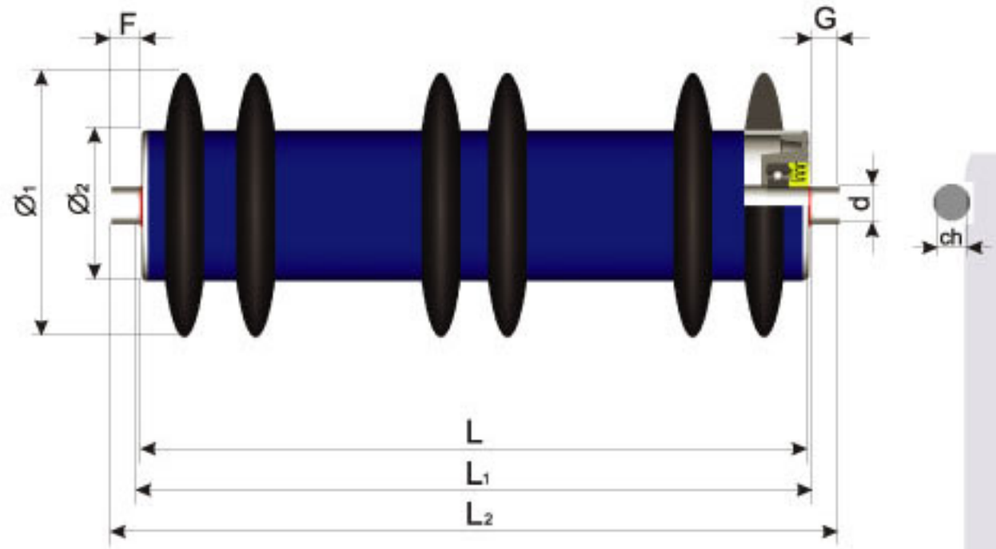

PSV/1 Ø133/Ø89 D

roller type	d	bearing	ch	F	G
PSV/1	20	6204	14	13	9

Dimensions (mm) L	L1	L2	Weight (kg) rotating parts	total	Belt width (mm) arrangements	Number of rubber discs
600	**608**	626	8.4	10.3	500	2+2+2
750	**758**	776	10.4	12.7	650	2+3+2
950	**958**	976	13.0	15.9	800	3+4+3
1150	**1158**	1176	15.5	19.1	1000	3+6+3
1400	**1408**	1426	18.8	23.1	1200	3+7+3
1600	**1608**	1626	21.3	26.2	1400	4+8+4
1800	**1808**	1826	23.9	29.4	1600	4+9+4
2000	**2008**	2026	26.5	32.6	1800	4+10+4
2200	**2208**	2226	29.1	35.8	2000	4+11+4

PSV/1 Ø159/Ø89 D

roller type	d	bearing	ch	F	G
PSV/1	20	6204	14	13	9

Dimensions (mm) L	L1	L2	Weight (kg) rotating parts	total	Belt width (mm) arrangements	Number of rubber discs
600	**608**	626	10.7	12.6	500	2+2+2
750	**758**	776	13.2	15.5	650	2+3+2
950	**958**	976	16.5	19.4	800	3+4+3
1150	**1158**	1176	19.8	23.3	1000	3+6+3
1400	**1408**	1426	23.9	28.2	1200	3+7+3
1600	**1608**	1626	27.3	32.2	1400	4+8+4
1800	**1808**	1826	30.6	36.1	1600	4+9+4
2000	**2008**	2026	33.9	40.0	1800	4+10+4
2200	**2208**	2226	37.2	43.9	2000	4+11+4

Return Spiral Roller

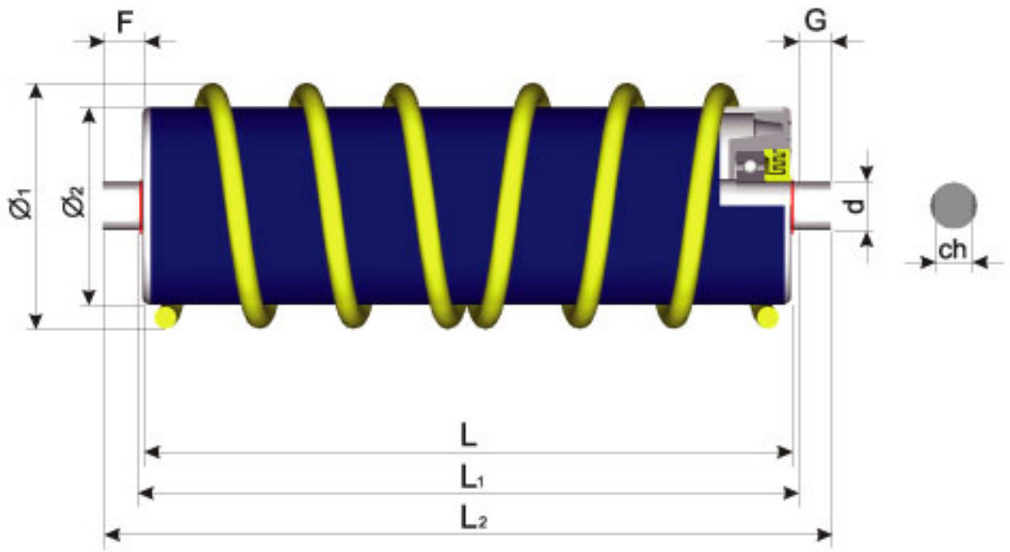

PSV/1 Ø108/Ø89 S

roller type	d	bearing	ch	F	G
PSV/1	20	6204	14	13	9

Dimensions (mm)			Weight (kg)		Belt width (mm)
L	L1	L2	rotating parts	total	arrangements
380	**388**	406	4.7	5.9	**300**
500	**508**	526	5.9	7.5	400
600	**608**	626	6.9	8.8	500
750	**758**	776	8.5	10.9	650
950	**958**	976	10.6	13.5	800
1150	**1158**	1176	12.7	16.2	1000
1400	**1408**	1426	15.3	19.6	**1200**
1600	**1608**	1626	17.3	22.2	1400

PSV/3 Ø133/108 S

roller type	d	bearing	ch	F	G
PSV/3	25	6305	18	16	12

Dimensions (mm)			Weight (kg)		Belt width (mm)
L	L1	L2	rotating parts	total	arrangements
600	**608**	632	8.9	12.0	**500**
750	**758**	782	10.8	14.7	650
950	**958**	982	13.3	18.2	800
1150	**1158**	1182	15.8	21.7	1000
1400	**1408**	1432	18.9	26.1	1200
1600	**1608**	1632	21.5	29.6	1400
1800	**1808**	1832	24.0	33.1	**1600**
2000	**2008**	2032	26.5	36.7	1800
2200	**2208**	2232	29.0	40.2	**2000**

Types of Idlers

Carrying Bracket
These are designed for use in low speed belt conveyors for light loads. Their simple low-weight design means they are low priced.

Carrying Flat
These have a single roller supported by two brackets fixed to the conveyor structure. They are used in picking, sorting and unit materials handling applications. Load capacity is much less than that of troughing idlers because of the long shaft length and only two bearings.

Carrying "Vee"
This type of idler is used in less demanding environments where belt speeds are generally less than 2,5 m/s. It is designed for transporting small grain material (gravel, sand). Owing to the shape of the trough it has a lower transportation output than a troughing idler however this is compensated for by its lower cost (amongst other things there is a 1/3 lower need for rollers).

Carrying Troughing
Most carrying sets have a troughing shape which allows greater amounts of material to be conveyed. These shape the belt to prevent spillage and are available with 20°, 30°, 35° and 45° trough angles with equal or unequal roller lengths. Troughing carrying sets have 3 rollers supported within the base frame which is fixed to the conveyor structure. Normal spacing is 1 to 1,6 m.

Carrying Garland (suspended) sets
Consists of several (3 or 5) rollers, attached together by a chain link. Contrary to troughing sets the maximum angle of the side rollers is 60°. This design leads to greater flexibility of the structure which results in improved belt centring, load containment, higher working speeds and load capacity, better absorption of dynamic stresses during conveying large bulky material, less shut down time and lower installation and maintenance costs.

Pulleys

Drum style pulleys
Can be used at any location.

Wing style pulleys
Can be used as a tail pulley and on gravity take-up assemblies. Helps prevent material build up and belt damage from transported materials.

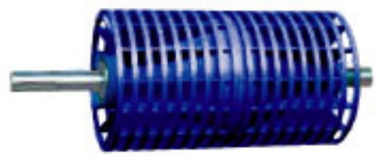

Squirrel cage style pulleys
Can be used in the same positions as wing pulleys for particular applications where very wet materials are conveyed and where the inner surface of the belt gets very dirty.

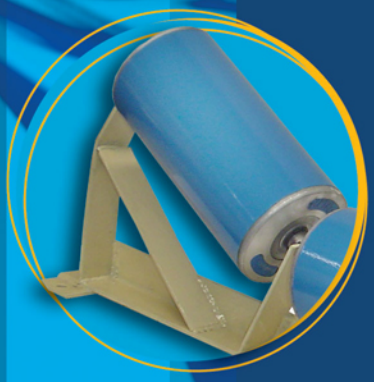

Bul. “Edvard Kardelj” bb P.O.Box 130
1430 Kavadarci R.Macedonia
tel:+389 43 412 500 fax:+389 43 412 700
e-mail: info@metalex.com.mk
www.metalex.com.mk